TITANMATE®
TOOL POSITIONING ARM

TMAR4-56
ARTICULATING ARM

VERSATILITY. TitanMate tool positioning arms offer innovative solutions for flexible manufacturing and assembly applications such as ***drilling, tapping, sanding, grinding, spot welding, screw, nut, bolt and stud driving*** applications. Our best-in-class design will ***enhance productivity, improve product quality, relieve operator stress, and increase workplace safety.***

INNOVATION. ***Computer aided design, 3D modeling and stress analysis software*** have allowed us to optimize our tool support arms to allow maximum reach, enormous payload capacity, and unbelievable torque reaction and vibration dampening characteristics. We have combined our ***90 years*** of assembly and manufacturing experience with modern technology to provide a product that will do the job right, last for years, and will be a pleasure to work with.

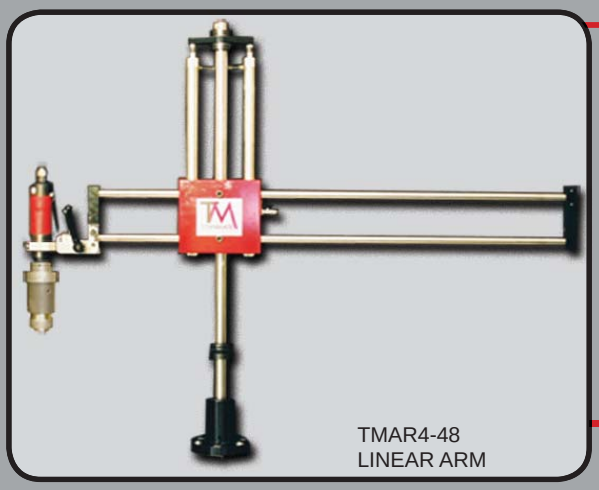

TMAR4-48
LINEAR ARM

BENEFITS. TitanMate assembly arms are unsurpassed in strength and rigidity plus they move as if suspended on air. TitanMate is made from the best components and is made to the highest quality and manufacturing standards. TitanMate is ***easy to install, quickly adjusted for a variety of applications, and extremely simple to maintain***. Every TitanMate includes a ***heavy duty base*** with leveling screws for easy set-up, a ***pneumatic lift system*** for rapid adjustment, and a choice of ***multi-positional or rigid tool mount***. TitanMate is built to provide the performance you need at a ***price you can afford.***

TITANLITE
ARTICULATING ARM

ADAPTIVE DESIGN. Manufacturing and assembly applications have a tendency to change or evolve over time; TitanMate is designed to adapt to those changes. TitanMate assembly arms include adaptive features such as adjustable ***pneumatic lift cylinders, interchangeable gas springs,*** user selectable ***single or dual cylinder lift*** (TML4 series only), ***multiposition mounting holes on lift arms, interchangeable lift arms and slides, and muti-position motor mounts.*** As your application changes, TitanMate will adapt.

SAFETY. Back injuries and repetitive motion disorders account for thousands of lost days of work every year. Since TitanMate lifts and suspends the power tool in the ideal work position, and dampens vibration while absorbing torque reaction, work place ***injuries can be significantly reduced or eliminated***, making your work place a ***safer, healthier environment.***

TITAN® Quality Assembly Tools Since 1920

TITAN® TOOL COMPANY, INC.
7410 West Ridge Road • P.O. Box 220 • Fairview, PA 16415
Phone (814) 474-1583 • FAX (814) 474-5337 • Email: titan@titantoolco.com

TITANMATE® ARTICULATING SERIES

TMAR2 SERIES

TMAR2-40 shown with optional air motor and tap accesories

TMAR4 SERIES

TMAR4-56 shown with optional air motor and Titan stud driver

TITANMATE® **ARTICULATING SERIES** torque arms are rugged tool support arms ergonomically designed to provide fingertip control for the most demanding applications. The sturdy tubular steel swing arm is connected to the base by means of a ***hardened and ground shaft.*** Both the main shaft and the center shaft utilize ***high quality roller bearings*** to minimize friction while maximizing precision and reliability. The twin parallel arms are made of steel tubing which effectively neutralizes vibration and torque reaction. The ***hybrid lift system*** combines the best attributes of a sealed high pressure gas spring with the flexibility of an adjustable pneumatic cylinder.

Standard features include:
- Multi position or rigid tool holder
- Adjustable air/gas lift assist package
- Hardened and ground steel shafts
- Precision bearings
- Base mount with leveling screws
- Welded steel swing arm

Optional features include:
- Custom motor mounts
- Power tools
- Quick release chucks and collets
- Tap holders
- Keyless chucks
- Stud drivers
- Work carts
- Floor pedestals

- Ergonomic: protects workers from injuries such as tendonitis and carpal tunnel syndrome.
- Efficient: maximizes production by minimizing scrap caused by worker fatigue.
- Versatile: one unit can tap, drill, fasten, lift, grind, polish, and so much more.
- Mobile: can be easily moved from one work station to the next.
- Economical: will pay for itself many times over its life span
- Durable: designed and manufactured to the highest industrial standards

TITAN TOOL COMPANY provides custom solutions for most any application. If your needs fall outside the standard product line, please contact Titan Tool Company for assistance with special applications. Our services are *prompt and free of charge.*

TITAN® Quality Assembly Tools Since 1920

TITANMATE® ARTICULATING SERIES

WORK ENVELOPE

TITAN® Quality Assembly Tools Since 1920

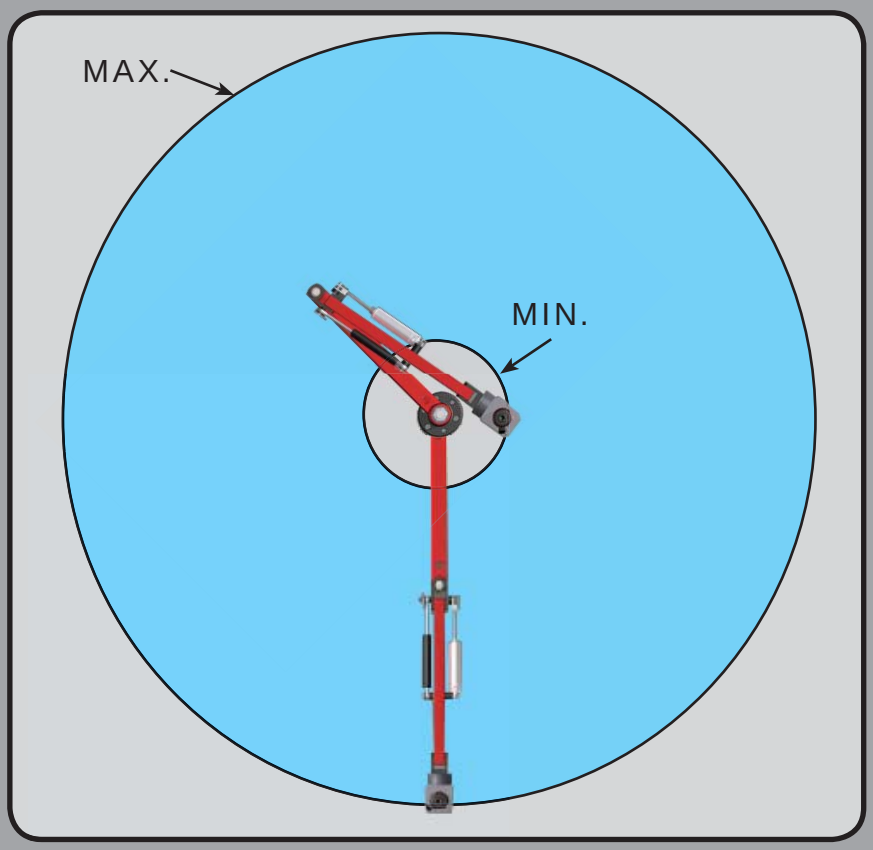

MODEL	MAX.	MIN.
TMAR2-40	40” (1016mm)	5” (127mm)
TMAR2-46	46” (1168mm)	10” (254mm)
TMAR2-52	52” (1320mm)	15” (381mm)
TMAR4-56	56” (1422mm)	14” (356mm)
TMAR4-62	62” (1575mm)	19” (483mm)
TMAR4-68	68” (1727mm)	24” (609mm)

NOTE: Maximum and Minimum values can vary with custom motor mounts.

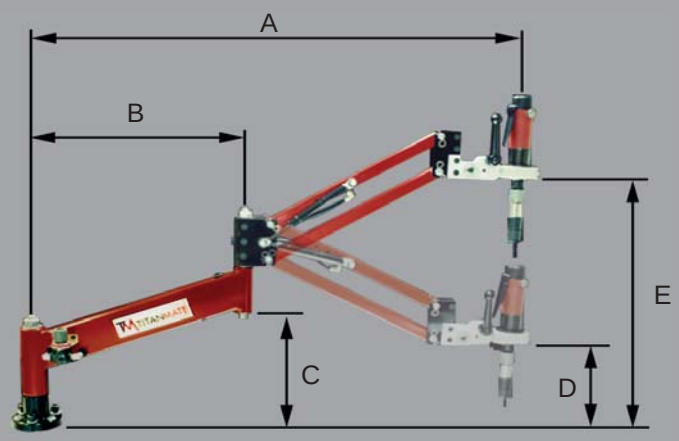

Dimensional data for standard configurations. Dimensions may vary with optional packages.

Payloads and torque values shown are standard. ***Payload capacity can be adjusted*** with ***optional lift packages.*** The TMAR2-40 series has a maximum payload of 15lbs. The TMAR4-56 series has a maximum payload of 110lbs. Optional packages can be added for ***torque up to 800 ft/lbs (TMAR4 SERIES ONLY).*** For all other models, please contact Titan Tool Company with desired payload and torque specifications.

MODEL	A	B	C	D	E	PAYLOAD	TORQUE CAPACITY
TMAR2-40	40” (1016mm)	16.5” (419mm)	10” (254mm)	8” (203mm)	25” (635mm)	10lbs. (4.5Kg)	35 ft/lbs. (47 Nm)
TMAR2-46	46” (1168mm)	16.5” (419mm)	10” (254mm)	6” (152mm)	28” (711mm)	10lbs. (4.5Kg)	35 ft/lbs. (47 Nm)
TMAR2-52	52” (1320mm)	16.5” (419mm)	10” (254mm)	3” (76mm)	32” (813mm)	10lbs. (4.5Kg)	35 ft/lbs. (47 Nm)
TMAR4-56	56” (1422mm)	21.5” (546mm)	10” (254mm)	6” (152mm)	30” (762mm)	20lbs. (9.1Kg)	100 ft/lbs. (136 Nm)
TMAR4-62	62’ (1575mm)	21.5” (546mm)	10” (254mm)	3” (76mm)	33” (838mm)	20lbs. (9.1Kg)	100 ft/lbs. (136 Nm)
TMAR4-68	68” (1727mm)	21.5” (546mm)	10” (254mm)	0” (0mm)	37” (940mm)	20lbs. (9.1Kg)	100 ft/lbs. (136 Nm)

TITANMATE® LINEAR SERIES

TML LINEAR SERIES

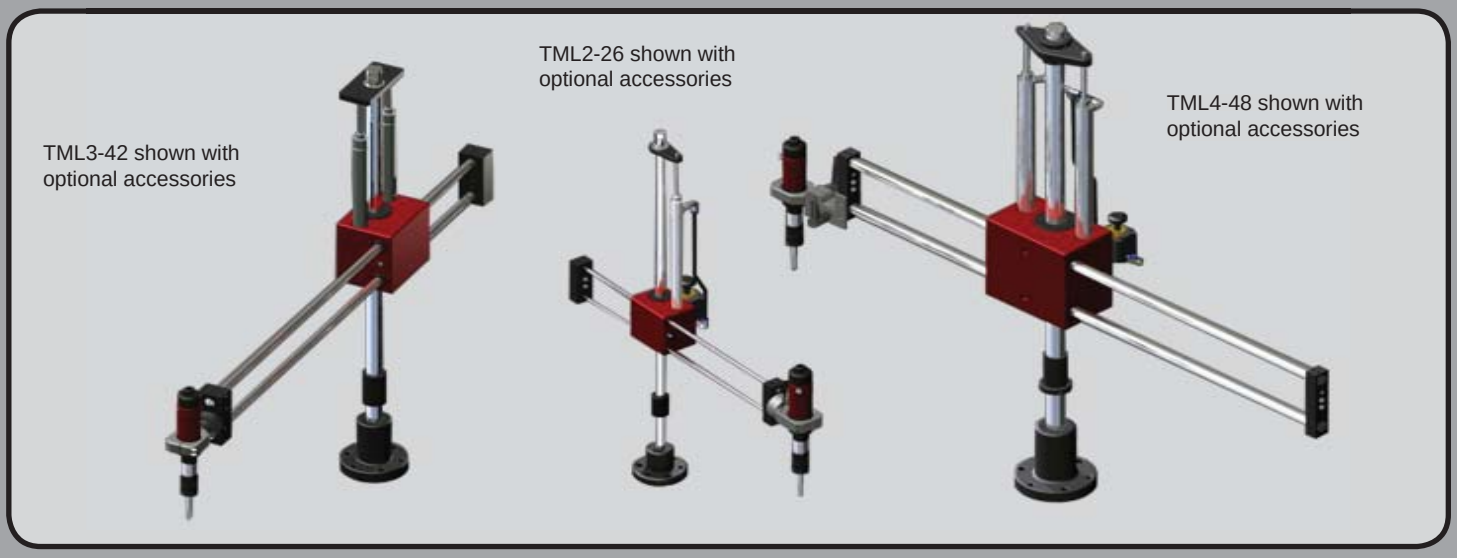

The TITANMATE® LINEAR SERIES torque arms are designed to provide precise control ideally suited for ***high toleranced*** tapping applications. The bearing housing is ***machined from a solid billet of aluminum*** to assure perfect bearing alignment for the life of the unit. To minimize friction the TML LINEAR SERIES incorporates ***high quality roller and recirculating ball bearings*** throughout its design. The vertical and twin parallel shafts are made of ***hardened linear shafting***. This combination of ***rigidity and frictionless motion*** makes the TML LINEAR SERIES the perfect choice for tapping applications requiring the ***maximum reliability and precision.***

Standard features include:
- Multi position or rigid tool holder
- Adjustable pneumatic lift package
- Hardened and ground steel shafts
- Precision bearings
- Base mount with leveling screws
- Solid aluminum bearing block

Optional features include:
- Custom motor mounts
- Power tools
- Quick release chucks and collets
- Tap holders
- Keyless chucks
- Stud drivers
- Work carts
- Floor pedestals
- Custom pnuematic controls

- Ergonomic: protects workers from injuries such as tendonitis and carpal tunnel syndrome.
- Efficient: maximizes production by minimizing scrap caused by worker fatigue.
- Versatile: one unit can tap, drill, fasten, lift, grind, polish, and so much more.
- Mobile: can be easily moved from one work station to the next.
- Economical: will pay for itself many times over its life span
- Durable: designed and manufactured to the highest industrial standards

TITAN® Quality Assembly Tools Since 1920

TITAN TOOL COMPANY provides custom solutions for most any application. If your needs fall outside the standard product line, please contact Titan Tool Company for assistance with special applications. Our services are *prompt and free of charge.*

TITANMATE® LINEAR SERIES

WORK ENVELOPE

TITAN® Quality Assembly Tools Since 1920

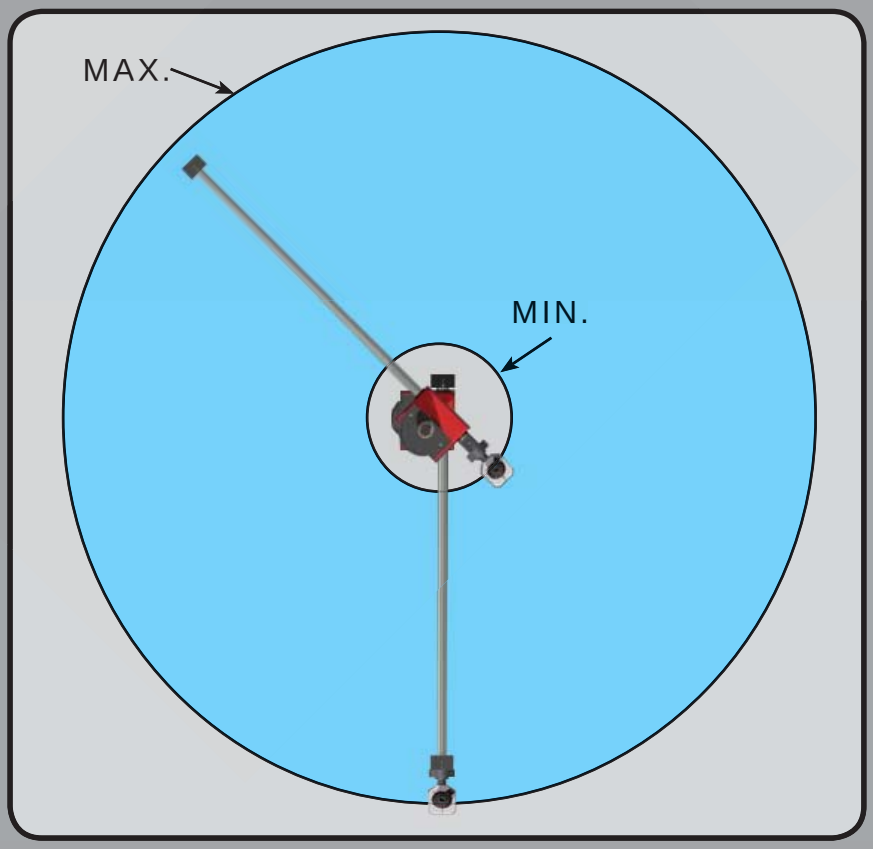

MODEL	MAX.	MIN.
TML2-26	21” (533mm)	4” (102mm)
TML3-32	30” (762mm)	7” (178mm)
TML4-48	45” (1143mm)	14” (356mm)

NOTE: Maximum and Minimum values can vary with custom motor mounts. Vertical and parallel shafts can be reduced in length to fit most applications. Reducing parallel shaft length will change maximum reach but not minimum.

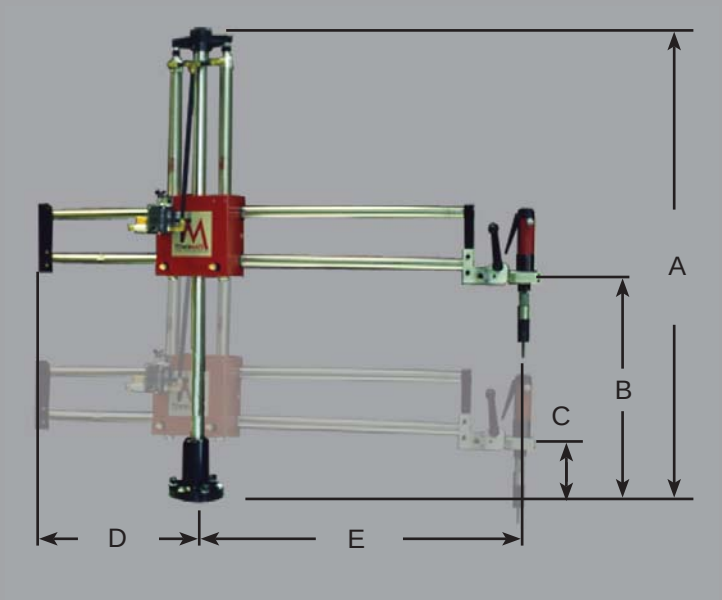

Dimensional data for standard configurations. Different horizontal arm lengths are available. Dimensions may vary when certain options are added or configuration is changed.

Please contact Titan Tool Company for optional equipment. Lift assits, pneumatic controls, encoders, and additional accessories are available.

MODEL	A	B	C	D	E	PAYLOAD	TORQUE CAPACITY
TML2-26	26” (1016mm)	17” (432mm)	6” (152mm)	2.5”-14” (63mm-356mm)	4”-21” (102mm-533mm)	5lbs. (2.26Kg)	20 ft/lbs. 27Nm
TML3-32	32” (1168mm)	20” (508mm)	7” (190mm)	5”-37” (127mm-940mm)	7”-30” (178mm-762mm)	35lbs. (15.75Kg)	75 ft/lbs. 101 Nm
TML4-48	48” (1320mm)	22.5” (572mm)	7.5” (190mm)	7”-39” (178mm-991mm)	14”-45” (356mm-1143mm)	50lbs. (23Kg)	100 ft/lbs. 136Nm

TITANLITE® LIGHT DUTY ARM

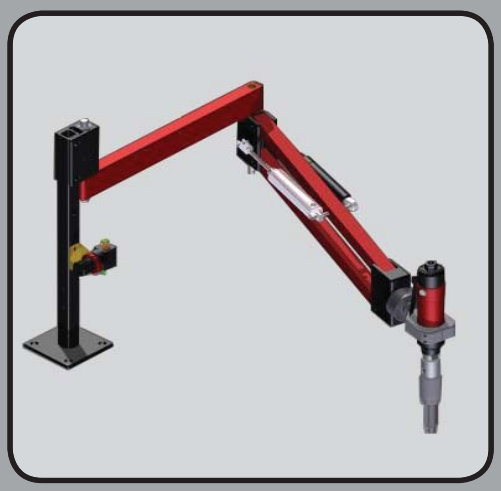

TitanLite torque arm uses many of the same ***high quality design and parts*** as the TitanMate product line. The vertical column, and parallel arm assembly is made from ***heavy walled tubular steel***. The swing arm is made of ***solid aluminum.*** A ***gas spring and air cylinder with regulator*** allow for payload adjustment and ***multiple configurations*** provide the ultimate in adjustability. ***All*** TitanLite arms are equipped with a rigid motor mount ***bored specifically for your motor*** for a perfect fit.

TitanLite ***assembly arms are perfect for:***

- **Tapping**
- **Screw driving**
- **Deburring operations**
- **Stud driving**

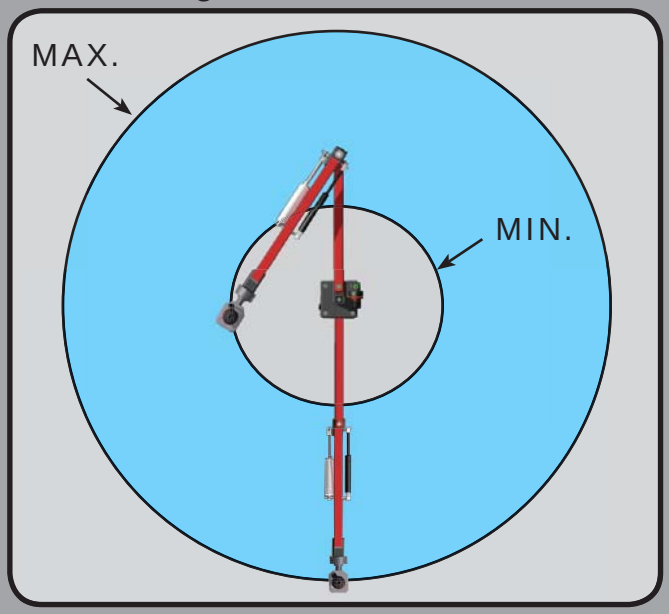

* The TitanLite can be setup up in numerous configurations. Dimensions “C”, “D”, and “E” vary depending on the configuration. Please contact Titan Tool Company for 3D models and additional dimenisons.

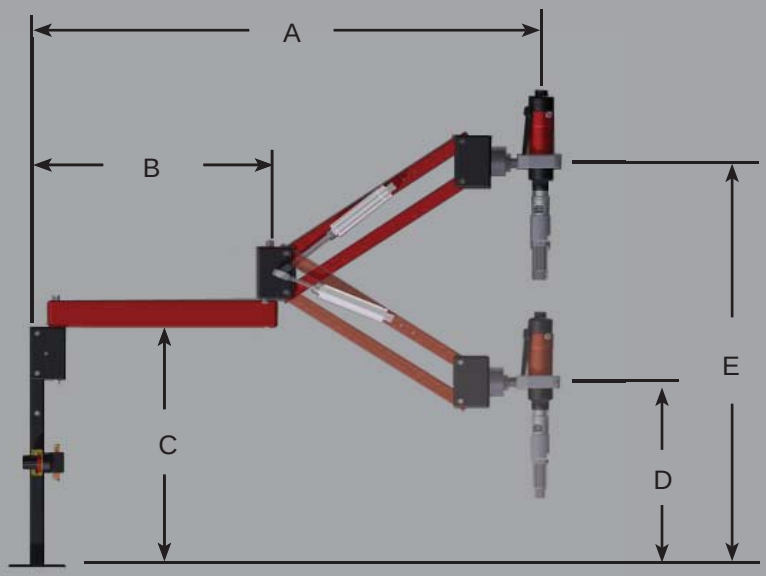

MODEL	A	B	*C	*D	*E	PAYLOAD CAPACITY	TORQUE CAPACITY	MAX. REACH	MIN. REACH
TL-38	38” (965mm)	29” (737mm)	18” (457mm)	13” (330mm)	30” (762mm)	10 lbs.	35 ft/lbs. (47.5Nm)	38” (965mm)	12” (304mm)

ACTUAL VERTICAL TRAVEL REGARDLESS OF CONFIGURATION IS 17” (432mm).

TITANMATE® OPTIONAL PACKAGES

POSITION SENSING

The TML3 Series and TML4 Series can be equipped with optional ***precision encoders*** for positional readout. Vertical and horizontal movement is covered by linear encoders that can be fit to most any length. A rotary encoder is used to read rotation of the arm. This system is ***ideal for applications where position feedback is required.***

Please contact Titan Tool Company regarding further specifications, pricing, and availability of Encoder Packages.

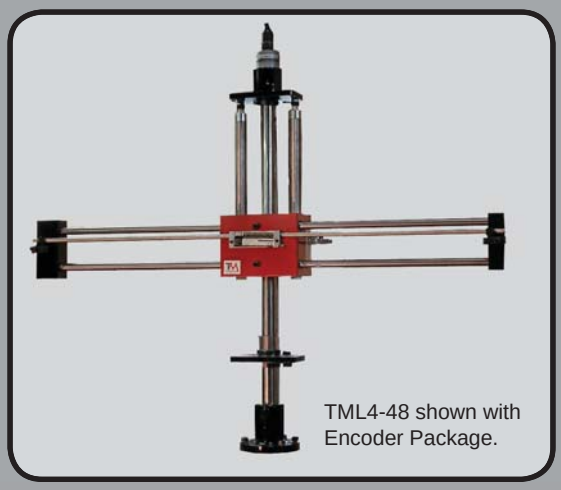

TML4-48 shown with Encoder Package.

HIGH TORQUE

Many applications have high torque requirements. The TitanMate **TMAR4-56** torque arm can be modified to accomodate up to ***800 ft/lbs. of torque.*** The lower arm is replaced with a ***solid aluminum arm*** and the upper arm is fitted with ***reinforcing plates.*** A ***heavy duty base, heavy duty bearings, and pins*** are added. The lift package is upgraded with larger ***cylinders and cylinder brackets.*** The bearing tubes and plates are ***welded*** together for a result that is ***extremely rigid and capable.***

Please contact Titan Tool Company regarding further specifications, pricing, and availability of High Torque Packages.

TMar4-56 shown with High Torque Package.

PNEUMATIC ASSIST PACKAGES

LIFT ASSIST

The TMAR4 Articulating Arm has a gas spring and adjustable pneumatic cylinder as standard. Adding ***larger dual acting cylinders*** and ***custom valving*** allows loads up to ***110 lbs.*** be ***positioned quickly and safely.***

The TML4 and TML3 Series Linear Arms can be equipped with controls to provide ***lift assist, downward pressure, and zero balance.***

DRILLING ASSIST

The TMAR4 Series can be fitted with a custom package to create up to ***125 lbs. downward pressure to facilitate operations such as drilling.***

Please contact Titan Tool Company regarding further specifications, pricing, and availability of Pneumatic Assist Packages.

TMAR4-56 shown with Pressure Assist Package.

TITANMATE
TOOL POSITIONING ARM

TITANMATE® OPTIONAL ACCESSORIES AND EQUIPMENT

All TitanMate models offer numerous standard accessories. Titan Tool Company also offers a wide range of optional accessories and equipment to fit most any application.

STANDARD EQUIPMENT

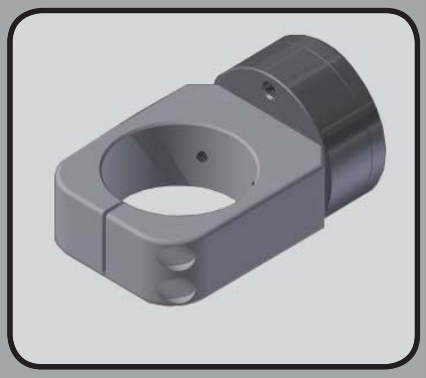

Adjustable Rigid Mount or Multi-Positional Mount (not shown)

Pnuematic cylinder, regulator, and gas spring combination

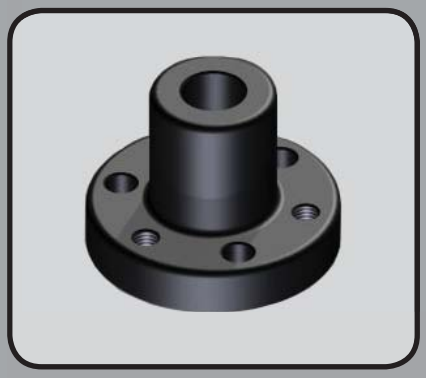

Steel base with three mounting holes and three leveling screws

OPTIONAL EQUIPMENT AND ACCESSORIES

Air Motors, Quick Change Chucks, and tapping collets

Heavy duty steel work carts

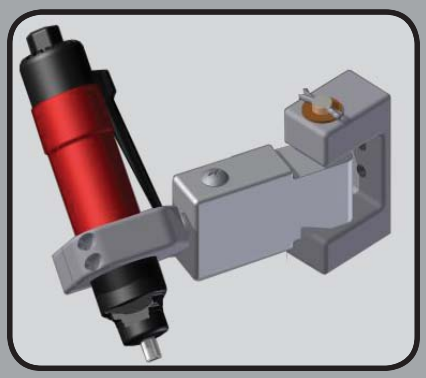

Custom Motor Mounts (swivel mount shown)

Stud Drivers and Removers

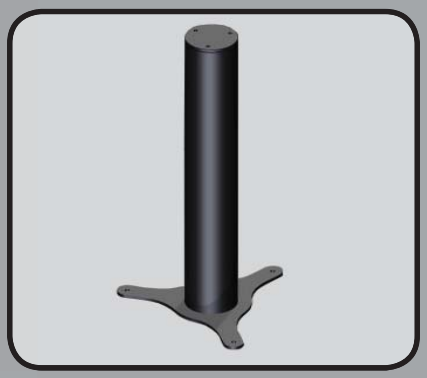

Custom heavy duty pedestals

Mechanical clutch units

TITAN® Quality Assembly Tools Since 1920

TITAN® TOOL COMPANY, INC.
7410 West Ridge Road • P.O. Box 220 • Fairview, PA 16415
Phone (814) 474-1583 • FAX (814) 474-5337 • Email: titan@titantoolco.com